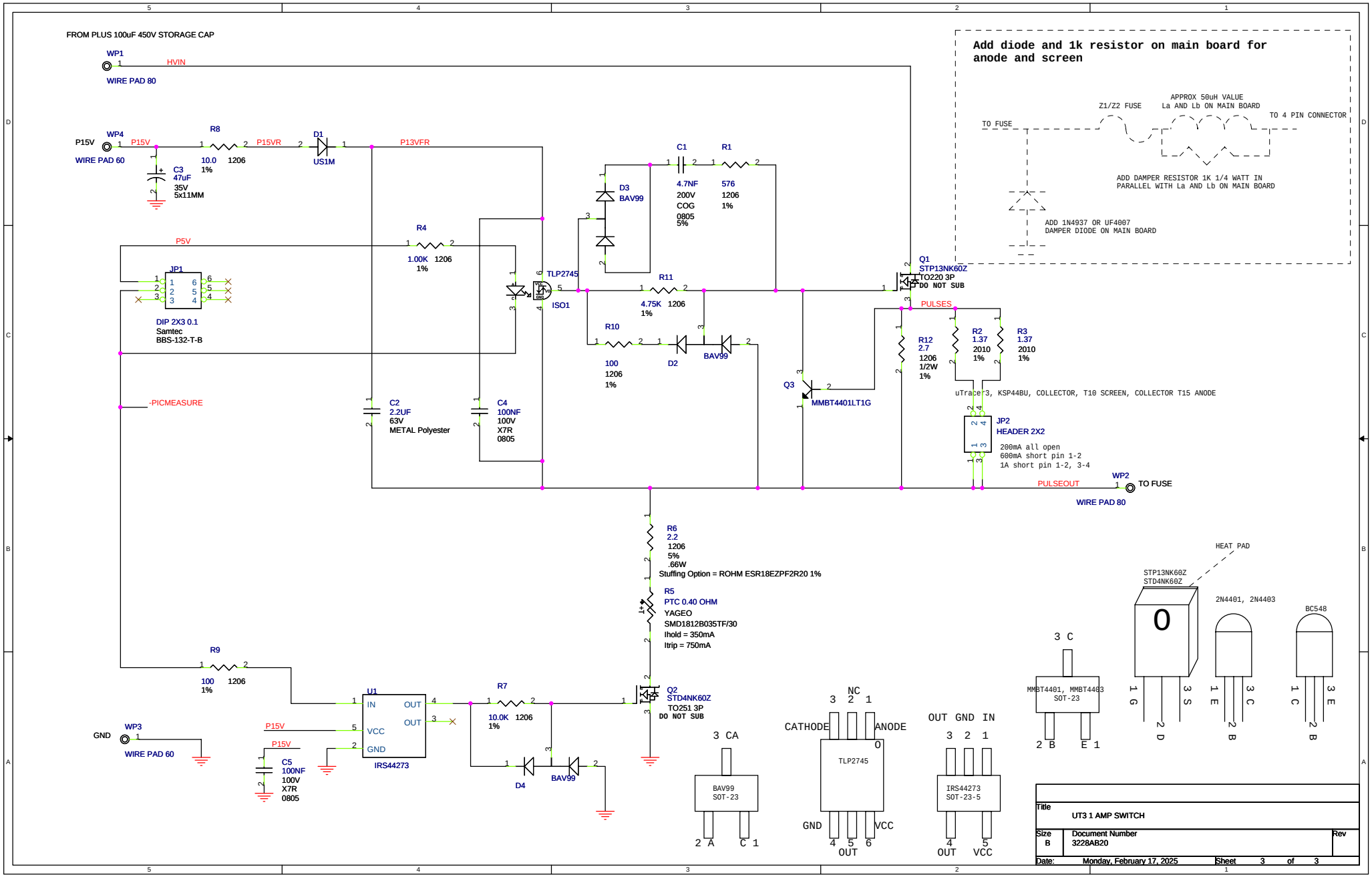
FROM PLUS 100uF 450V STORAGE CAP
WP1
HVIN
WIRE PAD 80
P15V
WP4
P15V
WIRE PAD 60
R8
10.0
1%
1206
P15VR
D1
US1M
P13VFR
C3
47uF
35V
5x11MM
C1
4.7NF
200V
COG
0805
5%
R1
576
1206
1%
D3
BAV99
R4
1.00K
1%
1206
P5V
JP1
DIP 2X3 0.1
Samtec
BBS-132-T-B
TLP2745
ISO1
R11
4.75K
1%
1206
R10
100
1%
1206
D2
BAV99
Q1
STP13NK60Z
TO220 3P
DO NOT SUB
PULSES
R12
2.7
1206
1/2W
1%
R2
1.37
2010
1%
R3
1.37
2010
1%
Q3
MMBT4401LT1G
uTrace3, KSP44BU, COLLECTOR, T10 SCREEN, COLLECTOR T15 ANODE
JP2
HEADER 2X2
200mA all open
600mA short pin 1-2
1A short pin 1-2, 3-4
-PICMEASURE
C2
2.2UF
63V
METAL Polyester
C4
100NF
100V
X7R
0805
PULSEOUT
WP2
TO FUSE
WIRE PAD 80
R6
2.2
1206
5%
.66W
Stuffing Option = ROHM ESR18EZPF2R20 1%
R5
PTC 0.40 OHM
YAGEO
SMD1812B035TF/30
Ihold = 350mA
Itrip = 750mA
R9
100
1%
1206
U1
IN
OUT
OUT
VCC
GND
IRS44273
R7
10.0K
1%
1206
D4
BAV99
Q2
STD4NK60Z
TO251 3P
DO NOT SUB
GND
WP3
WIRE PAD 60
P15V
C5
100NF
100V
X7R
0805
Add diode and 1k resistor on main board for anode and screen
TO FUSE
Z1/Z2 FUSE
APPROX 50uH VALUE
La AND Lb ON MAIN BOARD
TO 4 PIN CONNECTOR
ADD DAMPER RESISTOR 1K 1/4 WATT IN PARALLEL WITH La AND Lb ON MAIN BOARD
ADD 1N4937 OR UF4007 DAMPER DIODE ON MAIN BOARD
3 CA
BAV99
SOT-23
2 A
C 1
NC
3 2 1
CATHODE
ANODE
TLP2745
GND
VCC
4 5 6
OUT
OUT GND IN
3 2 1
IRS44273
SOT-23-5
4
OUT
5
VCC
3 C
MMBT4401, MMBT4403
SOT-23
2 B
E 1
HEAT PAD
STP13NK60Z
STD4NK60Z
1 G
2 D
3 S
2N4401, 2N4403
1 E
2 B
3 C
BC548
1 C
2 B
3 E
Title
UT3 1 AMP SWITCH
Size
B
Document Number
3228AB20
Rev
Date:
Monday, February 17, 2025
Sheet
3
of
3